Deciding to Act

Walt Lipke
Oklahoma City Air Logistics Center

When should a manager act to correct a project that is not performing well? What should a manager do if he or she decides to act? How does a manager know that his or her action is sufficient? These are age-old questions. A poor outcome is a certainty if the manager's decision and action are not appropriate. This article discusses these questions and the manager's considerations. It concludes with a description of the Decision Logic diagram linking project performance with other factors to possible management actions.

As managers, we worry about delivering a quality product that performs as the customer expects. It is management's job to guide the project team to meet the negotiated commitment of technical performance, cost, and delivery date. It is tough to do.

There are innumerable opportunities to negatively impact the project throughout the entire performance period. Several critical elements such as personnel, facility, data, equipment, material, training, and subcontractors have the potential to overcome the best of plans. It is not difficult for anyone with project management experience to recall instances when each one of these elements caused additional cost and consumption of schedule.

To the best of the project team's ability, the risks associated with the critical elements are assessed. Subsequently, both cost and schedule reserve are created to mitigate the foreseen risks. Oftentimes however, to be competitive, project estimates and reserves are *squeezed*, thereby creating a poor situation for the manager from the outset – an aggressive plan with inadequate risk mitigation resources.

In the preceding paragraphs, I have stated the universal dilemma of project management, "Build me a Ferrari on a Yugo budget." Certainly, this is a gross overstatement but as a project manager, it is the way you feel. You understand, very well, from the first day that the probability of success is not 90 percent. It is more likely to be 60 percent, at best. Therefore, a small amount of inefficiency caused by risk impacts will nearly consume the project's reserves.

The execution of the project plan with no variation is the most efficient manner of performance. When changes are made to compensate for critical element impacts, inefficiency is created and some of the reserves are consumed. Therefore, to judiciously use the reserves, managers must have confidence that the change they induce will be beneficial; i.e., the project will have a greater opportunity to complete within the cost and schedule commitment.

The remainder of this article will create an approach for project analysis and decision making. The approach will address the following:

> *"It is common knowledge we should not react to insufficient data. However, sometimes the pressure to do something is overwhelming, and we act foolishly."*

- When a manager should act.
- What action the manager should take.

A third aspect concerning the sufficiency of the action taken will also be discussed.

Project Management

Performance efficiency is measured by earned value management (EVM) indicators; i.e., the cost and schedule performance indexes, CPI and SPI, respectively[1]. Project managers using earned value in their management practice, thus, have a set of indicators that provide information concerning the health of their project. If the project is performing at the planned efficiencies (CPI and SPI equal to 1.0), the project is forecast to complete at the planned cost, and deliver its product on the expected delivery date. In addition, none of the planned cost or schedule reserves will be consumed.

One method to forecast whether or not a project will complete within its funding and negotiated delivery date is to compare the inverse indexes to ratios, which include the cost and schedule reserves[2]. When the value of CPI^{-1} is less than or equal to the cost ratio, the project manager has an expectation that the project will complete within the funding allocated. Correspondingly, if SPI^{-1} is less than the schedule ratio, the project is expected to complete by the negotiated completion date[3].

Of course, when the inverse indexes are greater than their respective ratios, the project manager knows his project is in trouble. The forecast indicates the plan will be exceeded, the reserves will be consumed, and more resources (time and funding) are needed. Understanding the project is failing, the project manager is inclined to take corrective action. Certainly the pressures from upper management and the customer compel the project manager to show that corrective action is already in progress.

Why is this the right thing to do? It may not be, but the project manager does not have anything in his tool kit to say he should do otherwise. Therefore, being *proactive* is his sole choice. Furthermore, the project manager knows that doing something, right or wrong, will buy time. Wishfully, within that time, a miracle happens and the project gets back on course. If good luck comes his way, the project is *righted*, and our hero receives a bonus and maybe even a promotion.

More than likely, the outcome of the corrective action taken will not be lucky. As mentioned previously, any change to the execution of the plan causes inefficiency. If the action taken is not the correct one, then management has inadvertently worsened the project performance and has not helped the situation. Subsequently, the manager, being proactive, takes another *shot in the dark*, likely worsening the situation once again. This process repeats until it becomes obvious to all concerned that the only way to deliver the product is to negotiate addi-

tional time and funding.

The outcome of this negative spiral is that the company and the project manager gain poor reputations. Additionally, if the product is extremely important and its sunk cost is significant with respect to the amount needed for completion, the agitated customer will likely agree to the added cost and delivery date extension. Under these circumstances, the company cannot expect repeat business with this customer.

Another common earned value approach is to manage using the cost variance (CV) percentage, i.e., CV divided by the planned cost (BAC). With this method, the project manager takes corrective action upon breaching an arbitrary limit, e.g., plus or minus 10 percent. It is common practice to ignore the schedule information and manage the project by cost variance alone. Generally, the results from the CV management method are as poor as described for the EVM indexes.

Certainly, there are successful projects that have been managed using earned value indicators; we are not implying EVM has no merit. Using earned value as a project management method greatly increases the opportunity for success, but improvement is needed. Project performance data is readily available, but rarely is it used advantageously. This is the state of today's management practice.

Analysis and Decision

Is there an alternative? Yes, there is. Simply reacting to poor performance indicators (CPI, SPI, or CV) is not good practice. There are other considerations needed to make the management decision. Including the aforementioned indicators of project performance, the manager needs information for the following areas:

- **Project Performance.** Do the indicators show poor project performance?
- **Sufficiency of Data.** Is enough data available to make a good decision?
- **Possible Strategy.** Can a strategy be created to recover the project?
- **Sufficient Time.** Is there enough time remaining to use the strategy?

By doing the analysis, and then answering these questions, a project manager can be confident the decision and action taken will have a much higher probability of success. Before moving on, a few words are needed concerning *Sufficiency of Data*. This information is critical in controlling management's tendency to overreact. It is common knowledge we should not react to insufficient data. However, sometimes the pressure to do something is overwhelming, and we act foolishly. Also, once a recovery strategy is implemented, we need to allow it time. It is not effective to amend and change strategies constantly; in fact, it is wasteful.

Supposing the questions can be answered, and a viable project recovery strategy can be prepared, *what actions are possible?* There are four basic actions:

- *No Action Required* when performance is good.
- *Investigate* when there is insufficient data.
- *Adjust/Realign* overtime or personnel.
- *Negotiate* cost, schedule, or requirements.

Connecting the analysis to the action is certainly not too difficult for the first two items. When the project is performing well, the manager would be wise to not make any changes. In addition, when the project has poor performance, but has insufficient data, it is prudent to investigate for potential causes and simply monitor the indicator(s) for improvement.

The Adjust/Realign and Negotiate actions are not so simply connected to the analysis results. The project manager should negotiate additional cost and/or schedule, or reduction of requirements, only when a recovery strategy is not possible or there is insufficient time for the recovery to be effective. Adjustment, i.e., raising or lowering overtime or number of project personnel, requires several inputs. It is the proper action when performance is poor, there is enough data to make an informed decision, a recovery strategy is possible, and there is sufficient time to execute it.

Careful realignment of personnel can yield increased efficiencies. However, the forecast effects of realignment cannot be quantified easily. It is recommended that this management action be used sparingly. Realignment can be an effective strategy when the values of CPI^{-1} and SPI^{-1} are less than their associated cost and schedule ratio, but worse than their planned value (1.0). Figure 1, Decision Logic, illustrates coupling the decision data to the management actions. The graphical diagram uses the logic symbols *and*, *or*, and *not* [4]. Once the inputs for *Poor Performance*, *Sufficiency of Data*, *Possible Strategy*, and *Sufficient Time* are known, the logic diagram can be used to identify the recommended management action.

When the cumulative value of either CPI^{-1} or SPI^{-1} is greater than its respective ratio, the project is performing poorly. Similarly, when there are more than seven periods of performance data, there is sufficient basis for taking action[5]. A possible strategy is one in which the forecast values of CPI^{-1} and SPI^{-1} at project completion are less than the cost and schedule ratios, respectively.

Developing a possible recovery strategy is a trade-off; improving one index negatively impacts the other [1]. For example, if the problem is poor cost performance, then the strategy, which causes its improvement, will detract from schedule performance, and vice versa. It is also to be noted that the project will experience an added expense to cost and schedule to implement the change.

Once the strategy has been determined, the To Complete Index (T_PI) is

Figure 1: *Decision Logic*

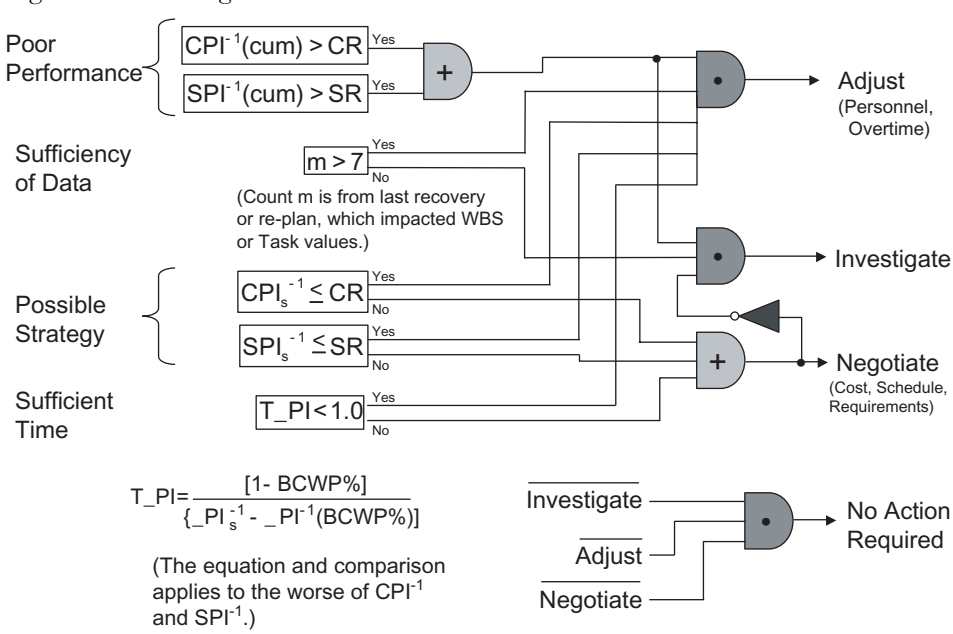

used to evaluate whether or not there is sufficient time for the recovery strategy to be successful[6]. When T_PI is less than 1.0, we are assured the strategy is viable. In other words, the project will not have to perform better than planned to achieve the customer commitments.

When the recommended action is either Adjust or Negotiate, management must then determine, *how much?* For Adjust, the project manager computes how many people to add or subtract from the project, or how much increase or decrease in overtime is needed to accomplish the recovery. For Negotiate, the manager determines the amount of overrun in cost and schedule. Knowing these values, he can then identify the requirements, which can be completed within the remaining time and funding, or the increases to schedule and cost needed to complete all of the requirements. Thus, the project manager has the data with which a contract change may be negotiated.

The calculation methods needed for Adjust, Negotiate, and Possible Strategy are beyond the scope of this paper. The reader may obtain the methods from [1].

Lastly, when Adjust, Investigate, and Negotiate are simultaneously inappropriate, the project requires no management action, i.e., No Action Required. The logic for this outcome is depicted in the lower right corner of Figure 1.

Example

To illustrate the use of the Decision Logic diagram in Figure 1, I will use hypothetical data. Let us suppose for this example the cost ratio (CR) equals 1.2, and the schedule ratio (SR) is 1.3. The reciprocals of the performance index values are 1.250 for CPI^{-1} and 1.125 for SPI^{-1}, respectively. The project is 40 percent complete (BCWP/BAC = 0.4) with 11 months of data.

If the project continues its present performance (CPI^{-1} exceeds CR), it cannot be completed within cost. However, the schedule performance provides some hope. Although schedule performance is not as good as planned, the project is expected to complete before the customer's delivery date (1.125 < 1.3). Therefore, a possible strategy is computed that elongates the schedule and improves cost efficiency. The possible strategy is determined to be SPI_s^{-1} and CPI_s^{-1} equal to 1.256 and 1.140, respectively. Using the CPI_s^{-1} strategy value (1.140), TCPI is computed to be 0.9375.

With all of the numerical information known, the logical comparisons can be made. We have a yes for Poor Performance; CPI^{-1} exceeds CR. Sufficiency of Data is yes; the value of m (11) is greater than seven. *Yeses* are evident for the Possible Strategy; both CPI_s^{-1} and SPI_s^{-1} are less than their respective ratios. In addition, Sufficient Time is yes; the computed value for TCPI is less than 1.0.

From the evaluation of the logical comparisons, the Decision Logic diagram is then used to identify the recommended management action. Investigate is not an appropriate management action because we have 11 months of data. We have also determined the recovery strategy is possible and there is sufficient time to execute it. Therefore, Negotiate is not the action to use. Adjust is the action the logic leads us to. Of course, with Adjust selected, No Action Required cannot be the recommended action.

For the Adjust action, the manager will perform calculations to determine either a revised overtime or staffing level. If all that is needed is a change in overtime, the success of the project recovery is more certain. Within reason, modifying the overtime level has much fewer repercussions than does changing staffing.

Summary

EVM provides incredible management information. However, it does not provide a good connection between the indicator values and the possible management actions. In today's project management climate, action is more likely to be taken because the project manager perceives it to be the correct thing to do in the eyes of the customer and his superiors.

The Decision Logic diagram provides the project manager with another tool. Using this tool, the method for deciding to act on a poorly performing project has been significantly refined. Furthermore, the action recommended is the one that will most benefit the project. The project manager now has a tool he or she can use effectively for managing his or her project, and for reporting his or her actions at the project reviews with both the customer and superiors. Using the decision diagram, the manager has supporting rationale for his or her actions.◆

References

1. Lipke, W. "Project Recovery … It Can Be Done." CROSSTALK Jan. 2002: 26-29.
2. Fleming, Q. Cost/Schedule Control Systems Criteria, The Management Guide to C/SCSC. Chicago: Probus, 1988.

Notes

1. The definitions of the cost and schedule performance indexes (CPI and SPI, respectively), and cost variance (CV) are:

   CPI = BCWP/ACWP
   SPI = BCWP/BCWS
   CV = BCWP —ACWP

   where,

   ACWP = Actual Cost for Work Performed
   BCWP = Budgeted Cost for Work Performed (earned value)
   BCWS = Budgeted Cost for Work Scheduled (project performance baseline)

   For more in-depth explanation of earned value and its indicators, see reference [2].
2. The definitions of the cost and schedule ratios are as follows:

   Cost Ratio = (BAC + MR)/BAC
   Schedule Ratio = (POP+SR)/POP

   where,

   BAC and MR are the EVM terms, Budget at Completion and Management Reserve (cost reserve), respectively. POP is the period of performance and SR is the schedule reserve, measured in units of time.
3. Although SPI, as defined by EVM, may be used, it is recommended to use the cumulative value of SPI(t). The time definition of the schedule performance index is:

   SPI(t) = ES/AT

   where,

   AT is the actual period of time from project start to present, and ES is the resultant time associated with BCWS, when evaluated at the cost equivalent to the earned value (BCWP).
4. Reference Figure 1 for this discussion of the logic symbols. The *and* symbol is identified by the heavy dot. The operation of *and* is all of the inputs (lines from the left) must be *yes* for the output to be *yes*. The *or* symbol has the + sign. For the *or* operation, the output is *yes* if any of the inputs are *yes*. The *not* symbol is the triangle with a circle at its point. Its operation is to change the input (line from the right) from *yes* to an output of *no*, and vice versa.
5. The criteria for data sufficiency is that we must have, at minimum, 50 percent confidence of knowing the true values of the performance indexes, CPI_t and

SPI_t. More than seven periods of performance data are needed for the cumulative quantities of CPI and SPI to meet this requirement. Statistically, CPI_t and SPI_t are known to the degree that, at minimum, it is 50 percent probable that they are within plus or minus one-fourth of the standard deviation of the periodic index values from their respective cumulative values.

6. The equation for the To Complete Index (T_PI) is shown on Figure 1. The underline spaces in the symbols are to be filled in with either *S* or *C*, indicating schedule or cost, respectively. For example, when TSPI is calculated, *S* would be filled in for the other blanks in the equation's denominator. The symbol BCWP% represents BCWP divided by BAC.

About the Author

Walt Lipke is the deputy chief of the Software Division at the Oklahoma City Air Logistics Center. The division employs approximately 600 people, primarily electronics engineers. He has 30 years of experience in the development, maintenance, and management of software for automated testing of avionics. In 1993 with his guidance, the Test Program Set and Industrial Automation (TPS and IA) functions of the division became the first Air Force activity to achieve Level 2 of the Software Engineering Institute's Capability Maturity Model® (CMM®). In 1996, these functions became the first software activity in federal service to achieve CMM Level 4 distinction. The TPS and IA functions, under his direction, became ISO 9001/TickIT registered in 1998. These same functions were honored in 1999 with the Institute of Electrical and Electronics Engineers' Computer Society Award for Software Process Achievement. Lipke is a professional engineer with a master's degree in physics.

OC-ALC/MAS
Tinker AFB, OK 73145-3312
Phone: (405) 736-3341
Fax: (405) 736-3345
E-mail: walter.lipke@tinker.af.mil

WEB SITES

Product Development and Management Association

www.pdma.org

The Product Development and Management Association's (PDMA) mission is to improve the effectiveness of people engaged in developing and managing new products – both new manufactured goods and new services. This mission includes facilitating the generation of new information, helping convert this information into knowledge that is in a usable format, and making this new knowledge broadly available to those who might benefit from it. A basic tenet of the PDMA is that enhanced product innovation represents a desirable and necessary economic goal for firms that wish to achieve and retain a profitable competitive advantage in the long term.

What You Need to Know About Management

www.management.about.com

The About Web sites are a network with each site run by a professional Guide who is carefully screened and trained by About. Guides build a comprehensive environment around each of their specific topics, including the best new content, relevant links, how-to's, forums, and answers to just about any question. What You Need to Know About Management includes general, people, and project management; leadership; communications business ethics; conflict resolution; and more. The Guide for this site is F. John Reh, who has a 30-year management career.

New Grange Center for Project Management

www.newgrange.org

The New Grange Center for Project Management is a nonprofit, all-volunteer organization dedicated to the principle of building a community of practice among project managers. Its goal is to get to the heart of project management by defining what really works and why. The backbone of the organization is its five-minute e-mail list where members take five minutes to address what they learned from their latest problem, which over time develops into a database. Topics include how to develop a project communication plan, how to define the best reward structure, and the right way to conduct a project post-mortem review.

Integrated Software Industry Benchmarking Association

www.isiba.com

The Integrated Software Industry Benchmarking Association (ISIBA) is a free association of software companies. ISIBA conducts benchmarking studies to compare operating performance and identify practices that improve the overall operations of its members. Consortium studies are offered to the membership as a whole with costs divided. Single-company sponsored studies addressing the interest of one member company can be offered to other selected members for no fee. Interest group roundtables are organized throughout the year.

Project Management Institute

www.pmi.org

Established in 1969, the Project Management Institute (PMI) is a not-for-profit, project-management professional association with over 100,000 members in 125 countries. PMI members are in many different industry areas, including aerospace, automotive, business management, construction, engineering, financial services, information technology, pharmaceuticals, and telecommunications. PMI publishes "A Guide to the Project Management Body of Knowledge," and its Project Management Professional certification is the world's most recognized professional credential for individuals associated with project management. In 1999, PMI became the first organization in the world to have its Certification Program attain International Organization for Standardization 9001 recognition.

Software Program Managers Network

www.spmn.com

The Software Program Managers Network (SPMN) is sponsored by the deputy under secretary of defense for Science and Technology, Software Intensive Systems Directorate. It seeks out proven industry and government software best practices and conveys them to managers of large-scale Department of Defense software-intensive acquisition programs. The SPMN provides consulting, on-site program assessments, project risk assessments, software tools, guidebooks, and specialized hands-on training.